MOBOTIX S15M
FlexMount Mono Camera

The S15M, which can be mounted discreetly behind wall or ceiling panels, is based on the S15D dual camera and thus also features weatherproof MxBus, MiniUSB and audio connectors to support various extensions.

Sees Everything. Is Hardly Seen.

The S15M is a high-resolution mono camera based on MOBOTIX 5MP platform technology. It can be mounted in a concealed manner behind a wall or ceiling panel, to a stainless steel plate etc. All that remains visible is the tiny exposure area of the hemispheric lens.

- Weatherproof mono camera system for flexible mounting solutions
- Integrated hemispheric design with day or night sensor
- MOBOTIX accessory AudioMount for fast and easy mounting
- Can be used as a Door Station camera (instead of the T25M-Sec camera module)
- Integrated DVR functionality: Slot for MicroSD card (up to 64 GB)
- Functional expansion via MiniUSB and MxBus connector
- Intelligent movement sensors (MxActivitySensor)

Technical specifications subject to change without notice

MOBOTIX Advantages

Extremley high-sensitive 5-megapixel sensors • All relevant events are automatically saved • Highly secure as motion sensors detect even the smallest movements and reduce the number of false alarms • Cost-effective as fewer cameras are needed thanks to HiRes panorama view • Maintenance-free with no heaters, fans or moving parts • Can be expanded thanks to encrypted two-wire bus (MxBus) • Synchronization via GPS satellite means data available in real time • Weatherproof from -30°C to 60°C (-22°F to 140°F) • No licensing or software fees, free-of-charge updates

EN

S15M – Technical Specifications

Security-Vision-Systems MOBOTIX

Camera Housing

Standard housing

- Hemispheric allround view (360°)
- Suitable for wall or ceiling mounting
- White or black
- Robust and low maintenance with no moving parts

AudioMount

A handy installation option for the S15M mono camera featuring a self-adhesive foil that can be attached to the back of thin and smooth surfaces (e.g., stainless steel plate, mailbox, etc.). The AudioMount has a pre-installed speaker and microphone, thus ensuring full intercom capabilities of the camera. S15M can also be utilized as a Door Station in combination with the AudioMount and other accessories (BellRFID bell buttons, MX-DoorMaster electronic door opener, MOBOTIX App).

S15M In A Mailbox

The S15M elegantly integrated into the mailbox using AudioMount serves as a Door Station camera that can be extended by quickly and easily connecting additional modules (bell, door opener, etc.) via MxBus.

Technical Data

Model versions	Sec, Sec-Night
Lens options	L12 (180° x 160°)
Sensitivity	Color sensor: 0.25 lux at 1/60 s, 0.013 lux at 1 s B/W sensor: 0.05 lux at 1/60 s, 0.0025 lux at 1 s MxLEO – Lowlight Exposure Optimization
Image sensors	1/2.5" CMOS, 5 megapixels, progressive scan
Max. image size	Color: 2048 x 1536 (QXGA), B/W: 2048 x 1536 (QXGA)
Image formats	Freely selectable image format (160 x 120 up to 2048 x 1536/color); PTZ views: Surround (Quad), fisheye full image, normal, panorama, double panorama, panorama focus (3 views)
Max. frame rate, M-JPEG (live/ recording)	VGA: 30 fps, MEGA/HD: 10 fps, QXGA 4 fps
Max. video rate MxPEG (live/ recording/sound)	VGA: 30 fps, MEGA/HD: 30 fps, QXGA: 20 fps
Image compression	MxPEG, M-JPEG, JPEG, H.264 (SIP video only)
Internal DVR	MicroSD Slot (recording inside the camera, up to 64 GB; 4-GB card preinstalled)
External storage	Directly on NAS and computer/server without additional recording software
Software (free of charge)	MxEasy video management software, MxControlCenter control center software, MOBOTIX App for iOS devices iOS 5.0 and higher
Image processing	Backlight compensation, automatic white balance, image distortion correction (including panorama image correction), motion detection, MxActivitySensor
Virtual PTZ (vPTZ)	Digital pan/tilt/zoom, continuous 8x zoom, full image recording in the background
Alarm/events	Triggering of events by integrated multiple-window motion detection, temperature sensor, notification over email, FTP, IP telephony (VoIP, SIP), visual/ acoustic alarm, pre- and post-alarm images
Audio (with accessories, e.g., AudioMount)	Lip-synchronous audio, intercom, audio recording
Interfaces	Ethernet 10/100, IPv4/IPv6, MiniUSB, MxBus; audio (IO); RS232 via MX-232-IO-Box (accessory)
Video telephony	VoIP/SIP, intercom, remote controlling with key code, event notification
Security	User/group management, HTTPS/SSL, IP address filter, IEEE 802.1x, intrusion detection, digital image signature
Certifications	EMC (EN50121-4, EN55022, EN55024, EN61000-6-2, FCC part15B, AS/NZS3548)
Power supply	Power over Ethernet (PoE in accordance with IEEE802.3af): PoE class variable (2/3) depending on operating mode; power consumption: 4.5 watts
Operating conditions	IP65 (DIN EN 60529), -30° to +60°C (-22° to +140°F)
Dimensions	Width x height x depth: 11.5 x 13 x 3.3 cm (basic module)
Weight	about 500 g

For more information on the entire range of MOBOTIX accessories and additional information on the S15M, such as prices, manuals, video management software for computers and iOS devices, etc., please go to **www.mobotix.com > Products**. Or - if you would like to talk to us on the phone to get advice with our products, please call +49 06302 9816-103.

EN

S15M – Technical Specifications

Security-Vision-Systems MOBOTIX

Camera Model	S15M-Sec	S15M-Sec-Night
Lenses, Sensors		
Hemispheric 12 mm (180° x 160°)	–	–
Super Wide-Angle 25 mm (82° x 61°)	–	–
Wide-Angle 38 mm (55° x 41°)	–	–
Wide-Angle 51 mm (40° x 30°)	–	–
Tele 76 mm (27° x 20°)	–	–
Tele 160 mm (13° x 10°)	–	–
Tele 320 mm (7° x 5°)	–	–
CSVario 28 – 63 mm (28° – 58°)	–	–
Image sensor with individual exposure zones	Color	B/W
Sensor sensitivity in lux at 1/60 s /1 s	0,25/0,013	0,005/0,0025
Image sensor resolution (color or B/W sensor)	5MP (2592 x 1944)	5MP (2592 x 1944)

Hardware Functions		
Protection class	IP65	IP65
Temperature range -30 to +60°C/-22 to +140°F	•	•
Temporary internal DVR	64 MB	64 MB
Internal DVR, ex works	4 GB (MicroSD)	4 GB (MicroSD)
Microphone/speaker – available only with audio accessories	e.g, via AudioMount	e.g, via AudioMount
Passive infrared sensor (PIR)	–	–
Integrated temperature sensor	•	•
Shock detector	•	•
Power consumption (typical)	< 4,5 watts	< 4,5 watts
Variable PoE class (factory default: 3)	2 or 3	2 or 3

Image Formats, Frame Rates, Image Storage		
Maximum image format (per sensor)	5MP (2592 x 1944)	5MP (2592 x 1944)
Maximum frame rate (MxPEG, max. resolution)	10 fps (5MP)	10 fps (5MP)
CIF images with 4 GB MicroSD DVR	250,000	250,000
VGA images with 4 GB MicroSD DVR	125,000	125,000
HD images with 4 GB MicroSD DVR	40,000	40,000
QXGA images with 4 GB MicroSD DVR	20,000	20,000

- • available ex works
- – not available

EN

S15M – Technical Specifications

Security-Vision-Systems MOBOTIX

Camera Model	S15M-Sec	S15M-Sec-Night
General Funcrions		
Digital zoom (continous) with panning	•	•
Codecs: Motion-JPEG/MxPEG/H.264 for SIP	•/•/•	•/•/•
Programmable exposure zones	•	•
Snapshot recording (pre/post-alarm images)	50	50
Terabyte ring buffer storage (internal/network)	•	•
Continous recording with sound (0.2 to 30 fps) – audio accessories needed	•	•
Event recording with sound – audio accessories needed	•	•
Time and event control/flexible event logic	•/•	•/•
Weekly schedules/holidays	•	•
Web functionality (FTP, email)	•	•
Playback/QuadView and MultiView	•/•	•/•
Bidirectional sound in browser – audio accessories needed	•	•
Logo generator, animated	•	•
Master/Slave arming	•	•
Several scheduled privacy zones	•	•
Customized voice messages – audio accessories needed	•	•
VoIP telephony (audio/video, alert) – audio accessories needed	•	•
Remote alarm notification (network message)	•	•
Signal inputs/outputs and RS232 via	MX-232-IO-Box	MX-232-IO-Box
Programming interface (HTTP API)	•	•
Security Features (HTTPS/SL, IP-based access control, IEEE 802.1X network authentification)	•	•

Video Analysis		
Video motion detector	•	•
MxAnalytics	–	–
MxActivitySensor	•	•

Video Management Software		
MxEasy (Windows/Mac OS X)	•	•
MxControlCenter (Windows)	•	•
MOBOTIX App (iOS)	•	•

S15M – Technical Specifications

Security-Vision-Systems MOBOTIX

Delivered Parts S15M (Secure)

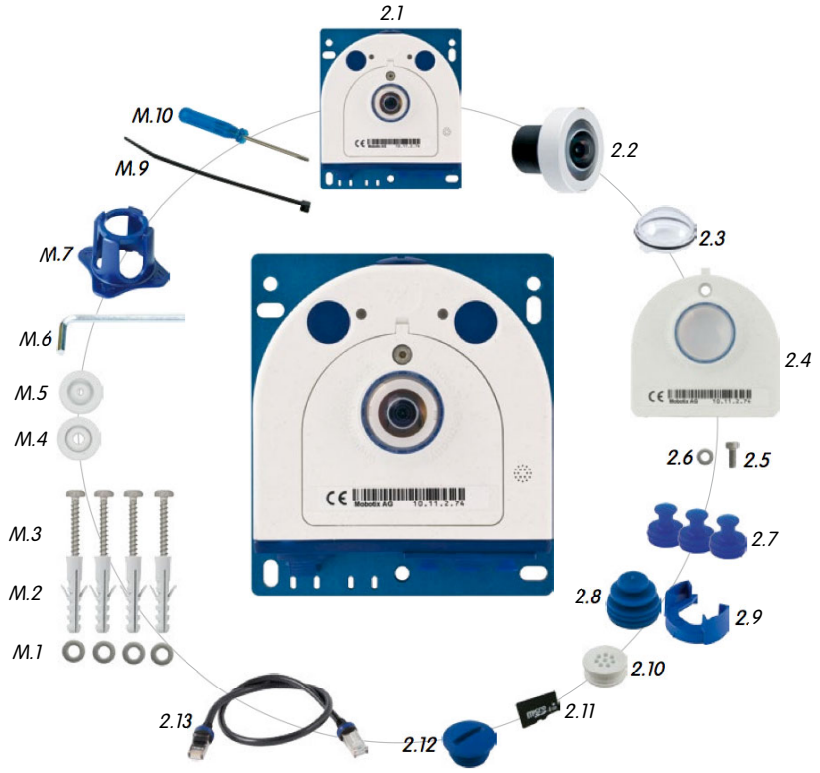

(Excerpt from the technical documentation: www.mobotix.com > Support > Manuals)

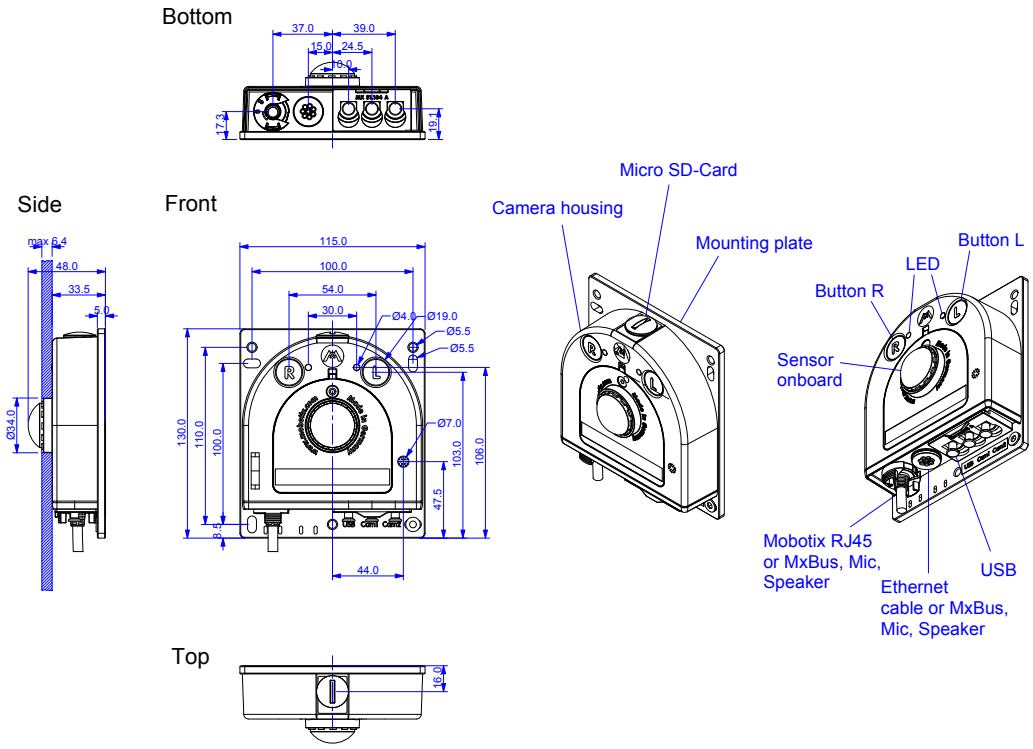

(Excerpt from technical drawings and 3D views: www.mobotix.com > Support > Image Database)

EN

S15M – Technical Specifications

Security-Vision-Systems MOBOTIX

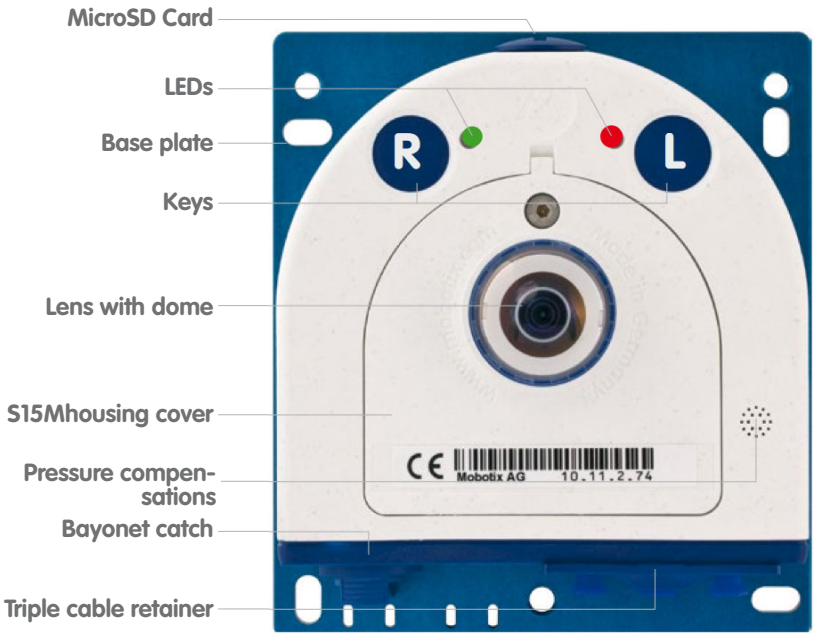

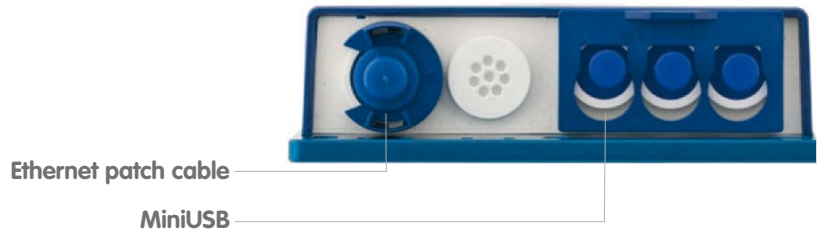

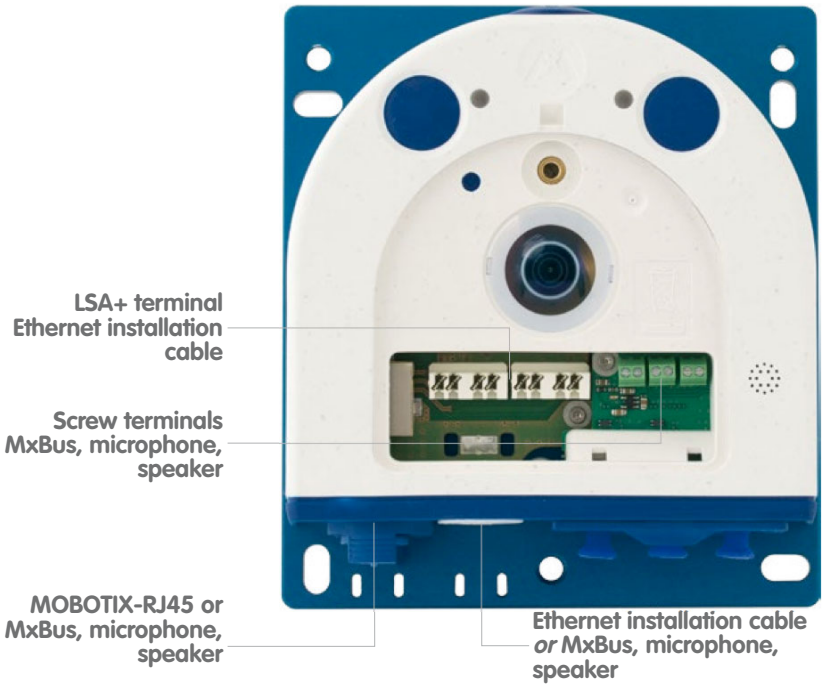

(S15M – Camera housing and connectors, excerpt from the technical documenation)